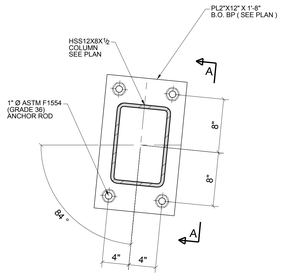

1 ANCHORD BOLT DETAIL - AR100
SCALE : 1:8

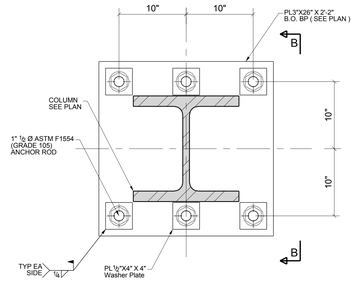

2 ANCHORD BOLT DETAIL - AR101
SCALE : 1:8

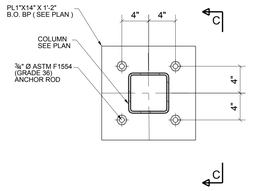

3 ANCHORD BOLT DETAIL - AR102
SCALE : 1:8

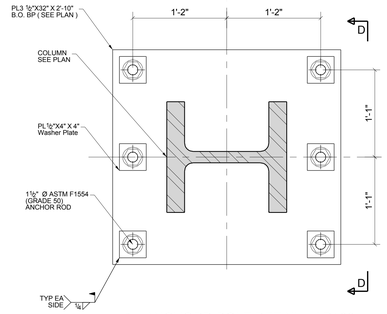

4 ANCHORD BOLT DETAIL - AR103
SCALE : 1:8

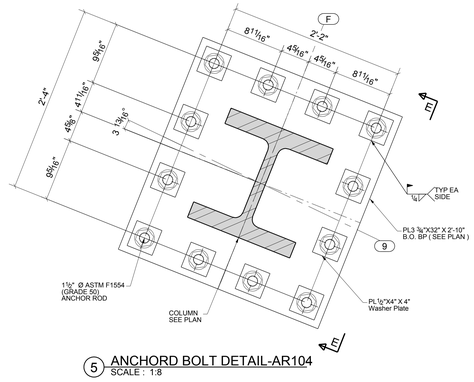

5 ANCHORD BOLT DETAIL-AR104
SCALE : 1:8

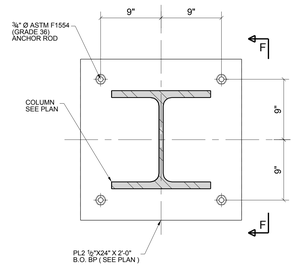

6 ANCHORD BOLT DETAIL - AR105
SCALE : 1:8

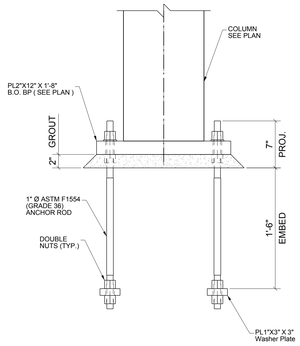

A SECTION
SCALE : 1:8

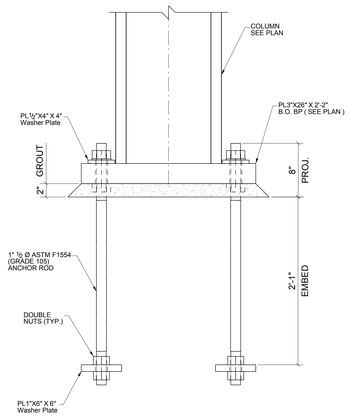

B SECTION
SCALE : 1:8

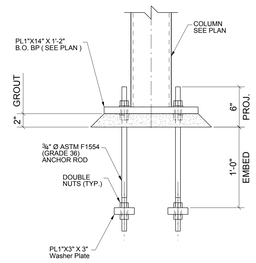

C SECTION
SCALE : 1:8

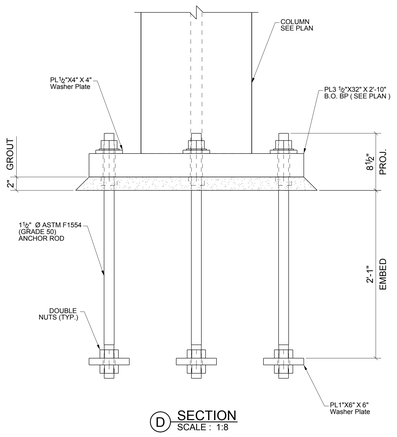

D SECTION
SCALE : 1:8

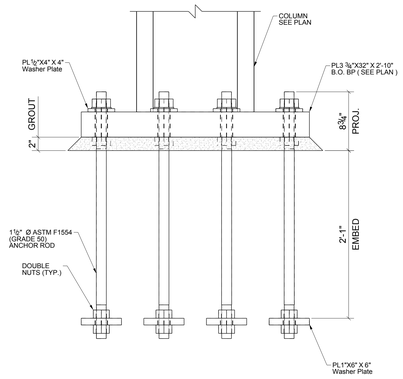

E SECTION
SCALE : 1:8

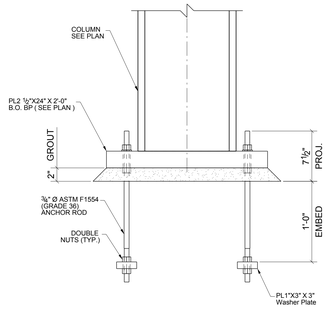

F SECTION
SCALE : 1:8

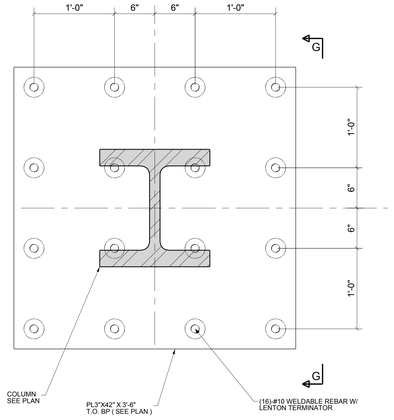

7 ANCHORD BOLT DETAIL - AR106
SCALE : 1:8

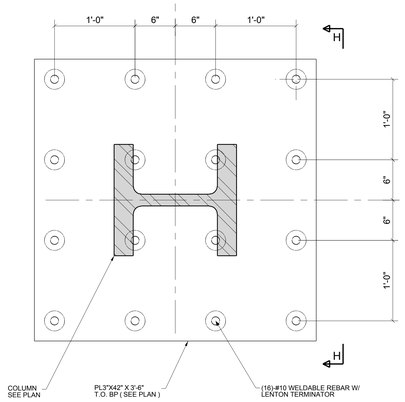

8 ANCHORD BOLT DETAIL - AR107
SCALE : 1:8

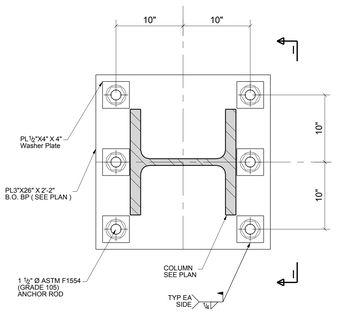

9 ANCHORD BOLT DETAIL - AR108
SCALE : 1:8

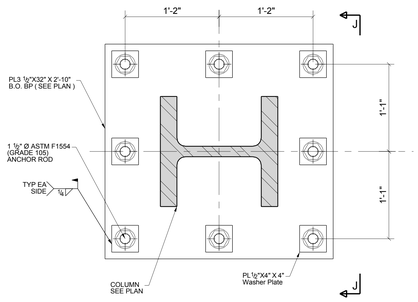

10 ANCHORD BOLT DETAIL - AR109
SCALE : 1:8

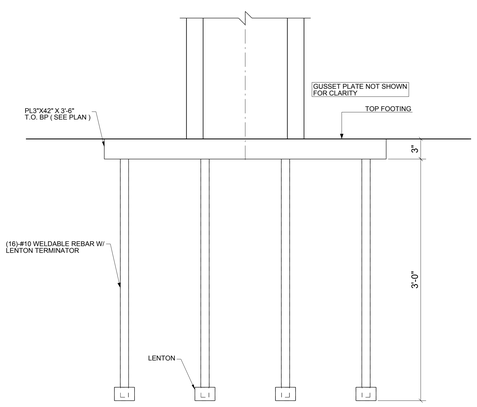

G SECTION
SCALE : 1:8

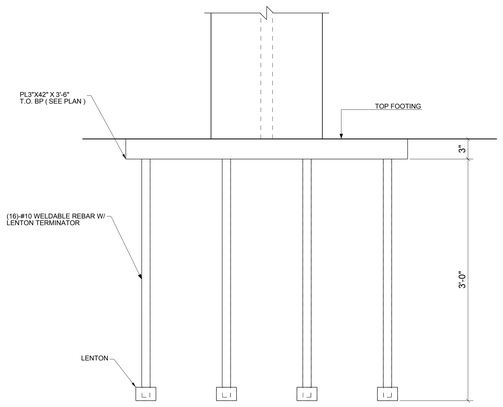

H SECTION
SCALE : 1:8

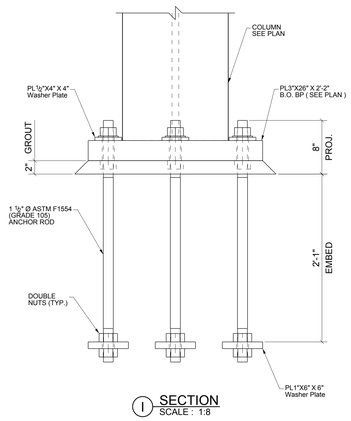

I SECTION
SCALE : 1:8

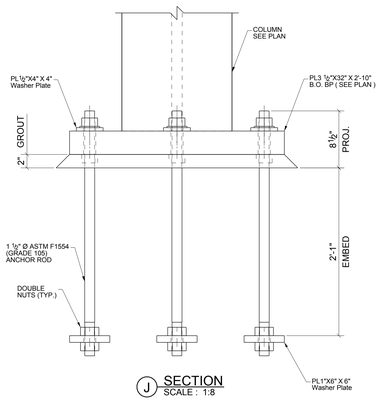

J SECTION
SCALE : 1:8

Per AISC Steel Construction Manual 13th Edition 16.3.3 Commentary
While it is the Fabricator's responsibility to report any discrepancies that are discovered in the Contract Documents, it is not the Fabricator's responsibility to discover discrepancies, including those that are associated with the coordination of the various design disciplines. The quality of the Contract Documents is the responsibility of the entities that produce those documents.

REF DWGS: S201– AM100

TEKLA STRUCTURES

DWG. ISSUE		REVISIONS		
DATE	PURPOSE	NO.	DATE	DESCRIPTION
12/24/2015	FOR APP			

EXCELSIOR BIM DRAFTING & DETAILING